# TECEbase – WT-Modul 1120 mm

9410000

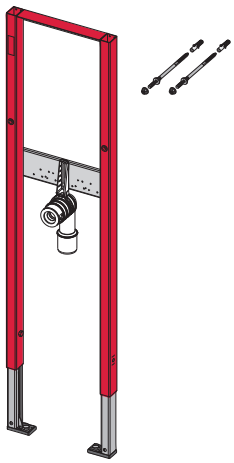

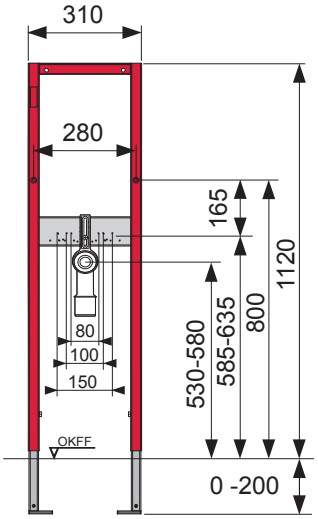


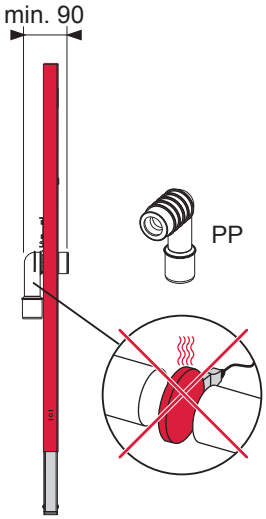


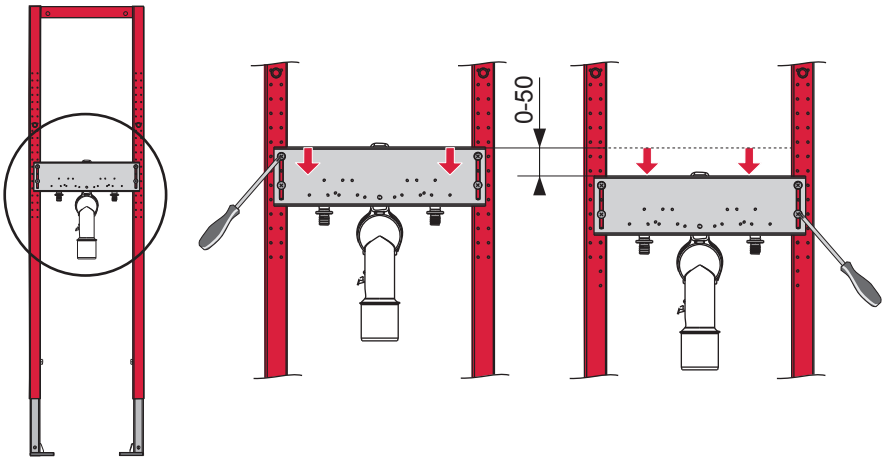


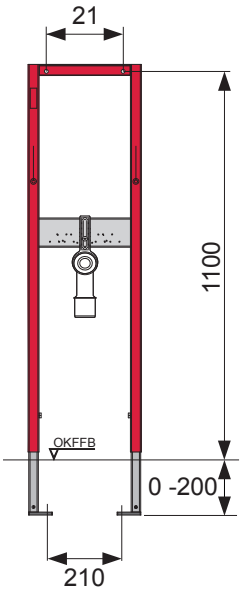


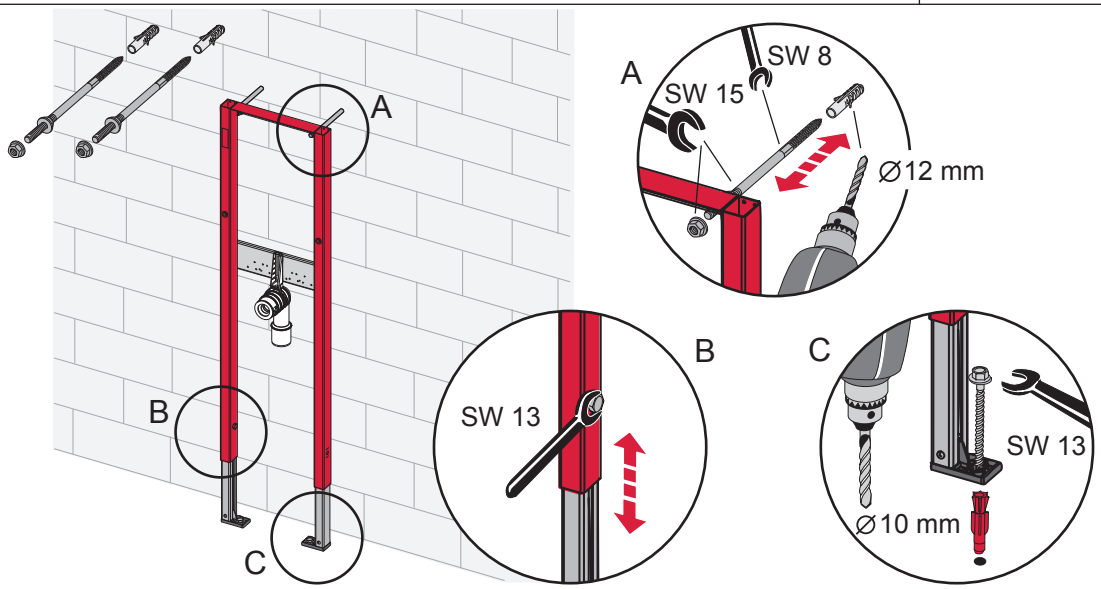

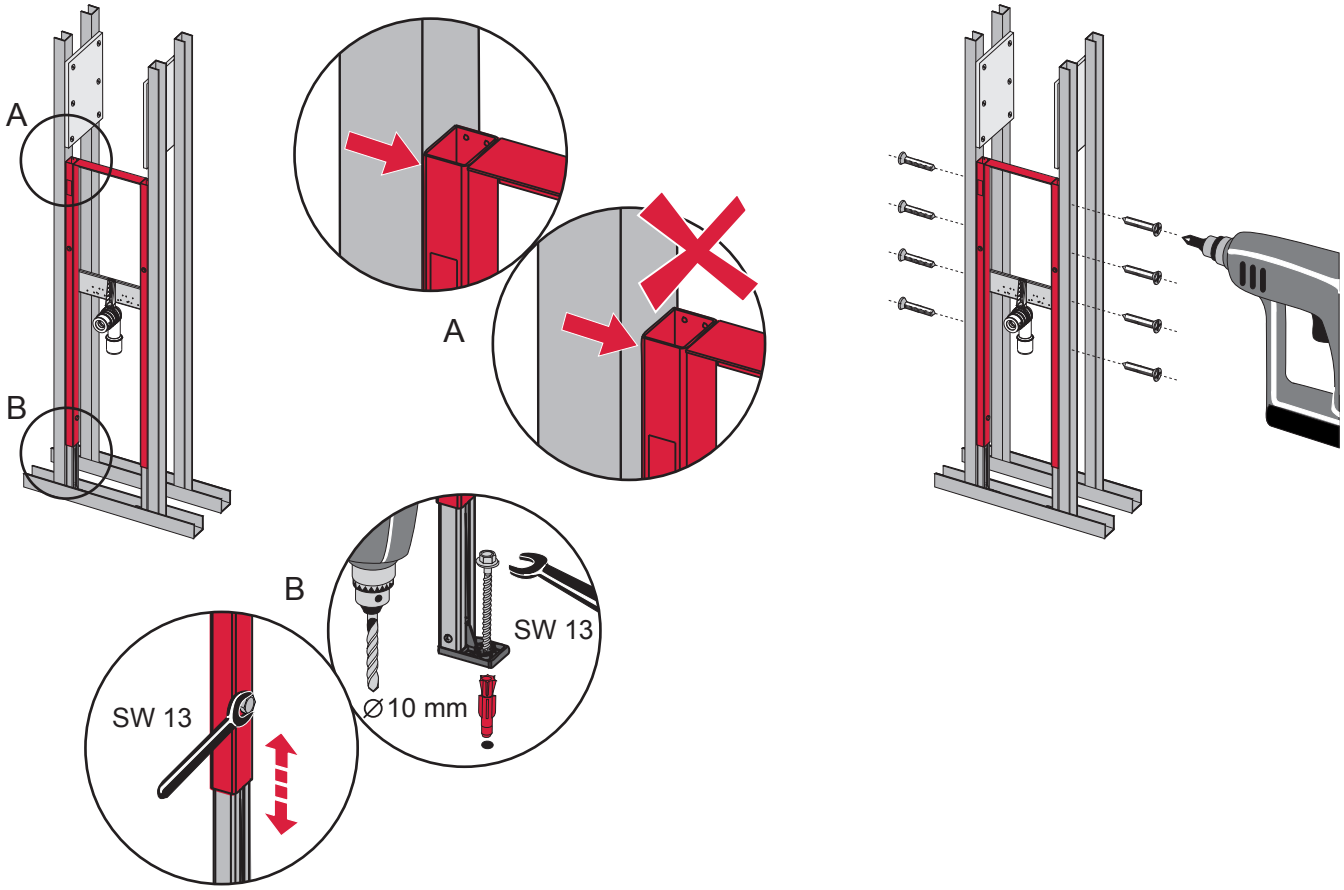


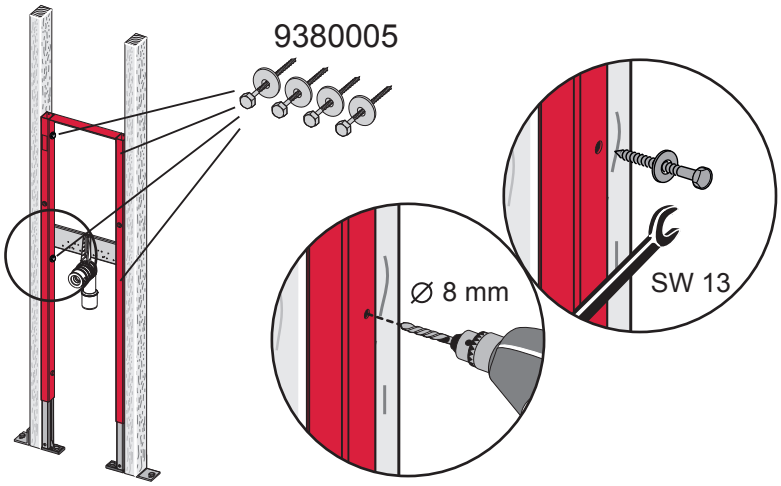


PR230 154 00 b